smartswitch
INFORMATION = CONTROL

SMART SWITCH TECHNOLOGIES

RD-800
Remote Tank Monitor
Installation Manual

Table of Contents

Electrical Specifications	2
Wiring Block Diagram	3
RD-800 Wiring Diagram	4
Programming Instructions	5
Operating Instructions	7
Errors	7
Mounting Instructions/Template	8

Electrical Specifications RD-800:

Supply Voltage	12 to 32 Volts DC (Auto-sensing)
Quiescent Current	0.03 Amps
Data Retention	50 years (without power)

Network (RS-485)

The cable connecting the Master Display Unit, the Remote Display/s and the Input/Output Units is referred to as the network cable and may run up to 1000 meters in total length.

©

All technologies, design and Intellectual property is owned by

Smart Switch Technologies Ltd
PO Box 272 Waikanae, NZ.
Phone 0064-4 293-4201 0064-4 293-4201
Mobile: 0064-274-919-805
Email: info@smartswitch.co.nz Web: www.smartswitch.co.nz

Wiring Block Diagram

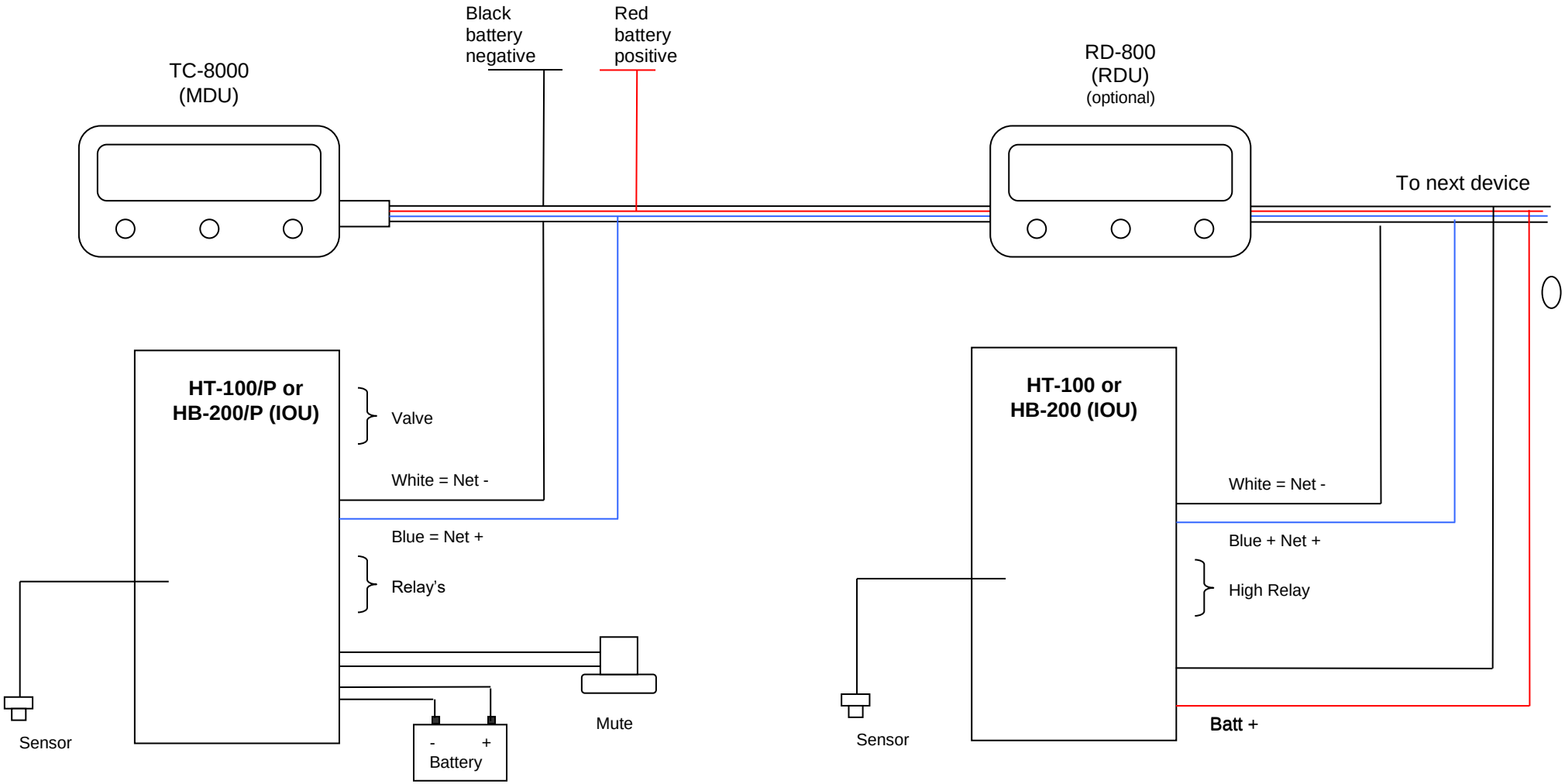

WARNING: As the HT-100/P & HB-200/P supply power for the pump, the supply, cables & fuse need be rated as per the pump manufacturers specifications.

Wiring Diagram for RD-800 (RDU)

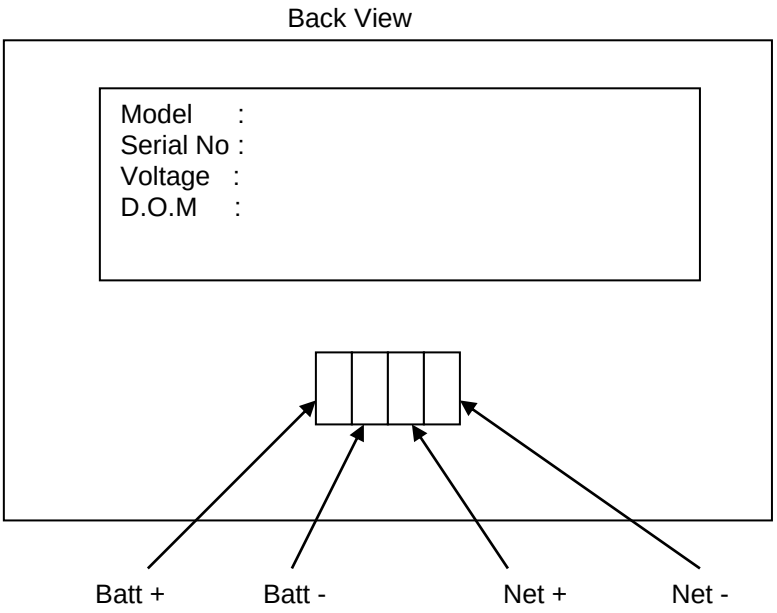

Display Functions

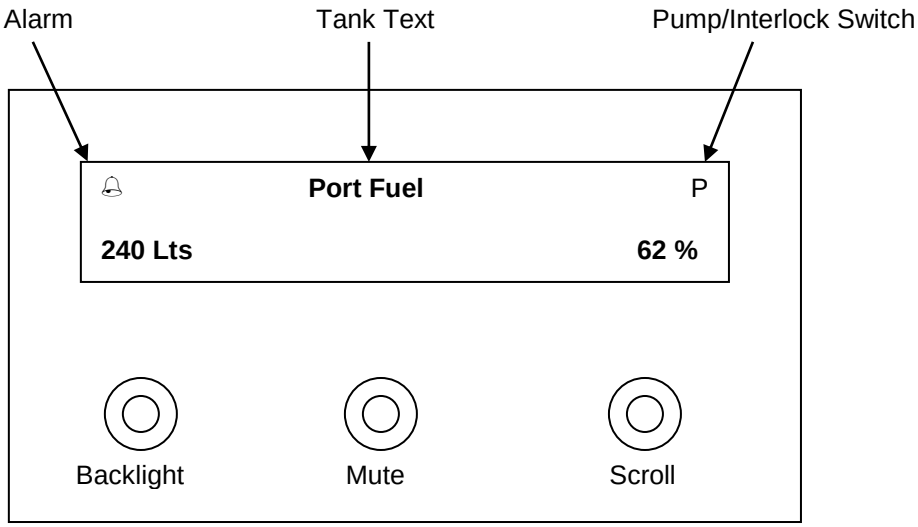

This system has two Display Modes. To change these see point 3 on page 6-Operating Instructions.

Note 1: The Lts/Gal & Percentage will ONLY work with HT-100 & HT-100/P with a manufacture date from 1st July 2007.

Display Mode 1

Port Fuel
##########################

Display Mode 2

Port Fuel	
120 Lts	**34%**

Programming Instructions:

Step 1: Placing the unit in Program Mode

Press and hold down the Backlight & Scroll keys together for 3 seconds. This will bring you to the Set-Up Menu and place the unit in program mode.

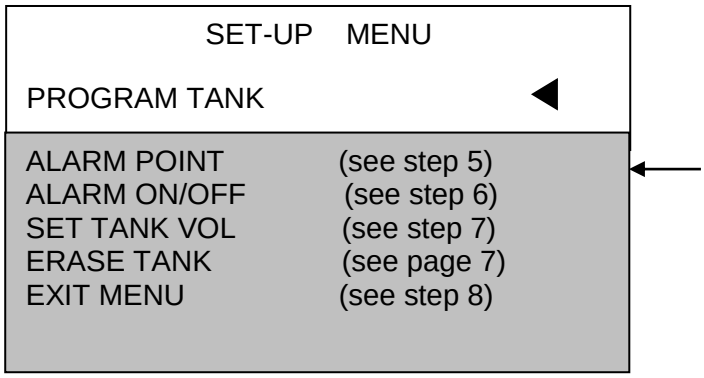

Use the Scroll key to scroll down to these.

Note: After a tank has been programmed any of these options can be changed by scrolling to the feature and pressing the Mute key.

Note: Press the Scroll key to scroll through the Set-Up Menu.

Step 2: Programming a Tank

The display will now show:

Use the Scroll or Backlight keys to change the Switch number which corresponds to the I/O unit being programmed (refer to Table 1, page 11 of the TC-8000 Manual) for Switch number. Once the Switch number has been selected press the Mute key.

Step 3: Selecting Tank Name

The display will now show:

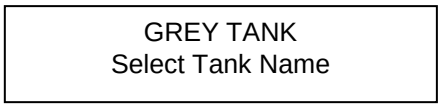

Use the Scroll or Backlight key to scroll through the pre-programmed tank names. Press the Mute key once the required name, or the name you would like to change, has been found. If you want the name on the display press the Mute key again, otherwise if you want to change the name see next step 3a.

Step 3a: Changing Tank Name Text

The tank name text may be changed. After selecting the Tank (name), as above, use the Backlight key to move the cursor to each individual letter and the Scroll key to scroll through the alphabet. Press the Mute key to enter, once you have finished.

Step 4: Selecting Tank Type

The display will now show:

Grey Tank Select Tank Type

Use the Scroll or Backlight key to scroll through the various tank types. Press the Mute key once the appropriate tank type has been found.

Step 5: Setting Alarm Point

The alarm point is the point where the tank will alarm you. E.g. almost or empty, almost or full.

The display will now show:

Alarm On Point ###############

Use the Scroll or Backlight key to move the alarm point to the desired level. Press the Mute key to set this as your alarm point.

Step 6: Audible Alarm

The display will now show:

Audible Alarm < No Yes >

Press the Scroll key to select “Yes” or the Backlight key to select “No”.
If Yes is selected the audible alarm will sound based on the alarm point set, as above.
If No is selected there will be no audible alarm associated with that tank, only a visual bell.

Step 7: Tank Volume (see Note 1 page 4)

The display will now show:

Set Tank Volume < No Yes >

This allows for displaying the tank volume in either Litres or Gallons. If this feature is required press the Scroll key to select “Yes”. Next select “Lts” for Litres or “Gal” for Gallons.

The display will now show: “ Set Volume 00000”. Use the Backlight and Scroll keys to change the value and the Mute key to enter and move to the next digit. When the last digit is reached and the Mute key is pressed the system will proceed to Step 8.

Otherwise press the Backlight key to select ”No”. If No is selected the system will proceed to Step 8.

Step 8: Exit or Menu

The display will now show:

< Exit Menu >

Press the Scroll key to return to the Set-Up Menu.
Press the Backlight key to Exit from the Set-Up Menu.

Erasing Tanks:

From the Set-Up Menu scroll down (by pressing the Scroll key) to “Erase Tank” then press the Mute key.

The display will now show:

GREY TANK Select Switch #

Use the Scroll or Backlight key to change the Switch number which corresponds to the tank you want to erase. Once the Switch number has been selected press the Mute key. The tank’s data will be erased and the system will return back to the Set-Up Menu.

Operating Instructions:

1/ Pressing the Backlight key will turn the backlight ON, press again to turn OFF.
2/ Press the Scroll key to alternate between tanks.
3 /Press and hold the Scroll for 4 seconds to alternate between display modes.
4/ Press the Mute Key to mute any alarm.

A flashing bell in the top left corner indicates the tank is in alarm. The bell on solid indicates there is a tank in alarm, but it is not the tank being displayed. The bell will flash when you scroll to the tank that is in alarm.

If a pump is turned on a “P” will be flashing in the top right section of the display.
If the Scroll key is then pressed to display another tank, the “P” will stay on solid, indicating there is a pump on somewhere but it’s not the tank you are looking at.

If a Seacock Interlock Switch is fitted, and the valve is closed, the pump will not turn on, a flashing “V” will be displayed instead of the “P” and the Audio Alarm will sound. Pressing the Mute key will mute the alarm. If the Scroll key is then pressed to display another tank the “V” will stay on solid, indicating there is a valve closed somewhere but it’s not the tank you are looking at.

Once the valve is opened the “V” will change to a “P” indicating the pump is on.

Alarms:
If a black or grey tank reaches the programmed “ alarm point ”, the audio alarm will activate indicating there is a full tank. If a water or fuel tank reaches the programmed “ alarm point ” the audio alarm will activate indicating there is a low tank.

The Audio Alarm can be turned on or off by holding down the Backlight key for 3 seconds, you will hear a bleep after every second. After 3 bleeps you may release the key.

Errors:

If the HT-100, HB-200 or HT-100/P, HB-200/P lose communication, or power, the text “COMMS FAULT” will be displayed on the bottom line (tank level bar-graph) of the RD-800 Display Unit. The Display will resume normal operation once the problem has been rectified.

© All technologies, design and Intellectual Property is owned by

Smart Switch Technologies Ltd
Po Box 272, Waikanae, New Zealand
Ph: 0064-4 293-4201 Fax: 0064-4 293-4201
Mobile: 0064-274-919-805
Email: info@smartswitch.co.nz Web: www.smartswitch.co.nz